TYPE	OUTPUT		POLE	TIME RATING	VOLTAGE V	Hz	SYN.SPEED R.P.M
	HP.	kW.					
AEHH-8B	400	298	6	CONT.	460	60	1200

TOTALLY ENCLOSED FAN-COOLED TYPE, SQUIRREL-CAGE ROTOR

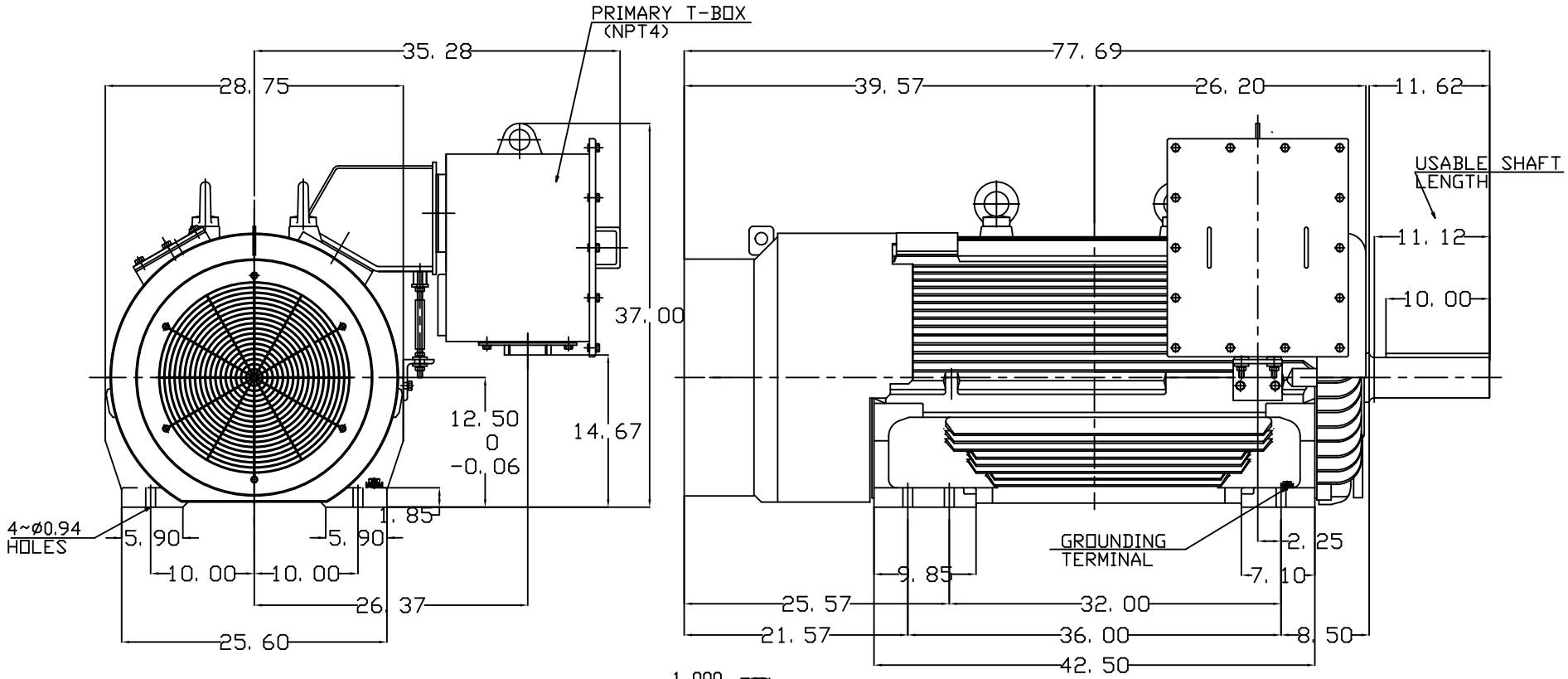

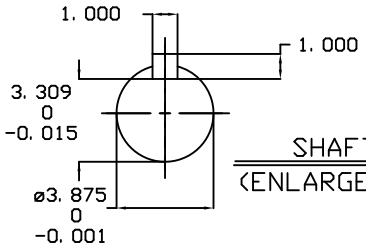

SHAFT END
(ENLARGED VIEW)

NOTE:
1. DIMENSIONS IN inch
2. FRAME NO. 5011B(5010B)
3. F CLASS INSULATION, S.F.1.15
4. FOR DIRECT FLEXIBLE COUPLING
5. ENCLOSURE: IP55
6. BEARING SIZE: DRIVE-END 6324C3
   OPP. DRIVE-END 6320C3
7. BOTH ENDS BEARING ARE INPRO SEAL
8. NON-SPARKING FAN
9. MOTOR APPROX. WEIGHT: 4900 lb

DWN.	J.WU	APR-14-2014
CHKD.	W.CHENG	APR-28-2014
APPD.	C.SHIH	APR-28-2014

DATE 3-25-2015

HB4006

OUTLINE DIMENSIONS

3-PHASE INDUCTION MOTOR

TECO Westinghouse

DWG NO. 4B040C149 REV:00